BAT 12Wh LI-Ion

Preliminary



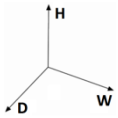

- Maintenance free Li-Ion technology
- Hi-Tech Power Boost for Out: 12 or 24 V 12Wh
- Protection: Over-current, Over-voltage, Over-charge, Deep-discharge, Short circuit
- Balance Cell Function
- High reliability
- Long-life battery pack
- Auto Testing for the battery State
- ADELBus "can" connection
- Connection with screws type
- IP20, Din Rail and Wall Mount

Feature

Battery Bank for DC-UPS "All In One". Lithium-ion technology, maintenance-free. For 12V or 24V field. Simple connection with screws for Wall mount or DIN rail. The device it is realized with Can protocol communication, to transfer and receive all data in ADELBus field.

Technical Data

Nominal Input Voltage	**12 or 24 VDC**
Battery Type	**N°2 LI-ion 2 Ah**
Energy	**12Wh**
Protection Fuse	**7.5 A**
Life Cycle	**1500**
Communication	**Can Open**

Field 12V "Charging Data"

End-of-charge Voltage (Float charge)	**13 VDC**
Max. permissible charging current	**0.7 A**

Field 12V Discharging Data

Battery disconnection from CBI	**< 8 VDC**
Nominal Discharging current	**5 A**
Max. permissible Discharging current	**6 A**
Self-discharge rate at 20 °C	**15% x month**

Field 24V "Charging Data"

End-of-charge Voltage (Float charge)	**26 VDC**
Max. permissible charging current	**0.4 A**

Field 24V Discharging Data

Battery disconnection from CBI	**< 19 VDC**
Nominal Discharging current	**2.5 A**
Max. permissible Discharging current	**3 A**
Self-discharge rate at 20 °C	**15% x month**

General Data

Protection Degree (EN/IEC 60529)	**IP 20**
Protection Class	**III**
Screw type connection: Torque:	**0.2 - 2.5 mm² (24 – 12 AWG)** **0.6 - 0.8 Nm**
Dimension (WxHxD)	**54 x 90 x 61 mm**
Weight	**0.4 kg**
DIN Rail	**Yes**
Wall mount	**Yes**

Climatic Data

Ambient Temperature operation	**0 … 60 °C**
Ambient Temperature Storage	**0 … 60 °C**
Humidity at 25 °C, no condensation	**95 %**

Norms and certifications

The CE mark in According to EMC Directive 2014/30/UE and Low voltage Directive 2014/35/UE.

Electrical Safety

In compliance to UL508, EN IEC 61010-2-201:2018
According to EN 60950-1/VDE 0805 (SELV) and EN 50178/VDE 0160 (PELV).
EN IEC 62368-1: 2014/AC:2015

Buffering time 12V field

Load	Time Min (12V)	Time Min (24V)
Load 0.5 A	**154**	**76**
Load 1 A	**76**	**38**
Load 1.5 A	**51**	**25**
Load 2 A	**38**	**18**
Load 2.5 A	**30**	**15**
Load 3 A	**25**	**12**
Load 3.5 A	**21**	**10**
Load 4 A	**18**	**9**
Load 4.5 A	**16**	
Load 5 A	**15**	
Load 5.5 A	**13**	
Load 6 A	**12**	

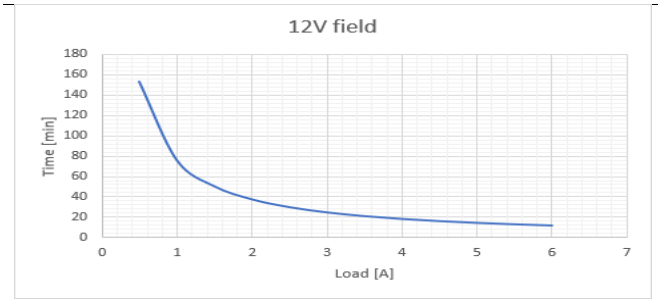

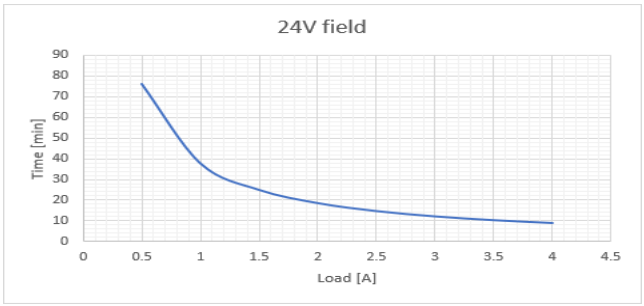

Electrical Diagram

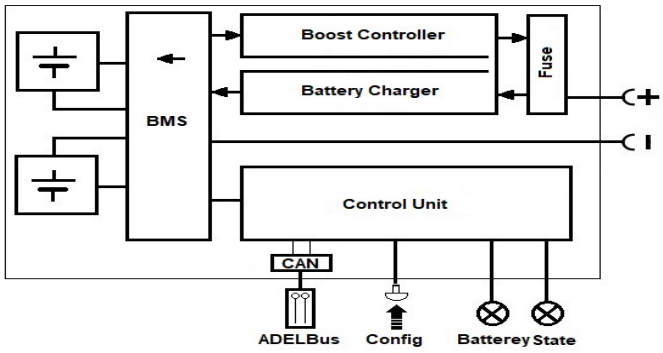

Drawings

DIN Rail Mount and Wall Mount

