PTC-Resistor-Relay Type MS40ZT
for Elevators

MS40ZT



Part number:
T221120 AC 220-240 V

The PTC-resistor relay MS40ZT monitors particularly engines at elevator cars and lifts.
A pulse input monitors the movement of the elevator car as long as the motor is switched on.

- watchdog timing adjustable 5 - 50 s.
- temperature monitoring with PTC-resistor
- integrated RESET-button
- LED for temperatur alarm
- LED for watchdog alarm

At elevator systems the temperature of the motor and the travelling motion have to be monitored. With the car at rest and contact between terminals 2 and 5 closed, the integrated relay picks up (terminals 8, 9 connected). The time monitoring starts with the opening of the contact between terminals 2 and 5. Then the pulse input between terminals 3 and 6 must continously open and close during travelling motion. When the pulse stops or

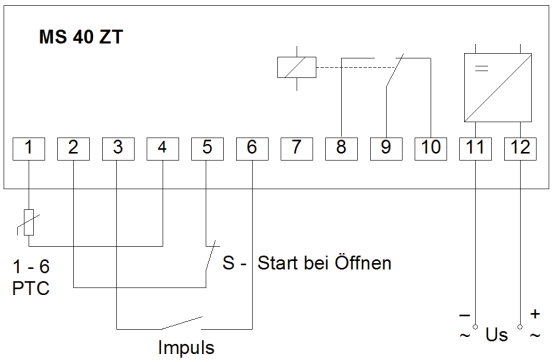

Technical Data

Rated supply voltage Us	AC 220 - 240 V ±10 %, 50/60 Hz, 3VA
connectable PTC resistors	1... 6 PTC according to DIN 44 081 or 44 082
switching point	< 4000 Ω
output relay	1 change-over contact (co)
type of contact	type 2 (see "general technical informations")
test conditions	see "general technical informations"
rated ambient temperature range	-20... +55 ∞C
dimensions (h x w x d) attachment	design S 12: 82 x 42 x 121 [mm] on 35 mm DIN rail according to DIN EN 50 022 or with screws M4
protection housing / terminals	IP 30 / IP 20
weight	approx. 280 g